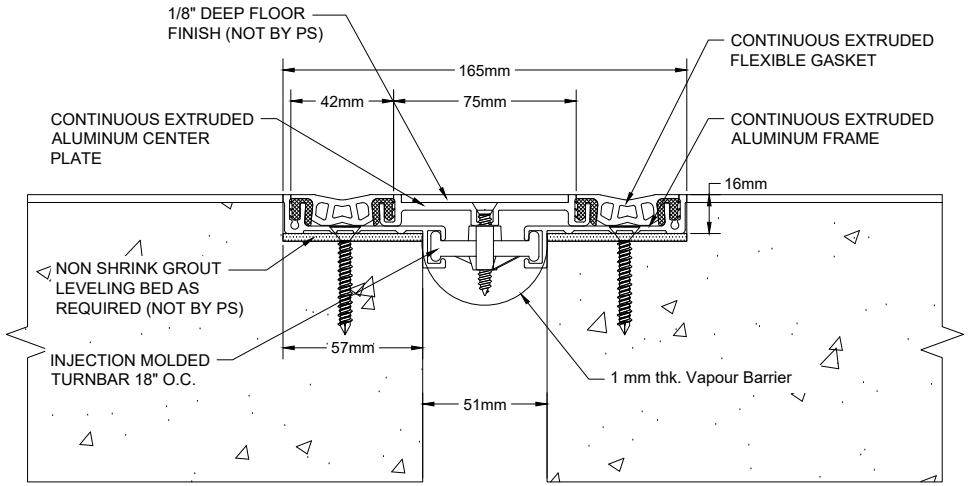

PTR 200

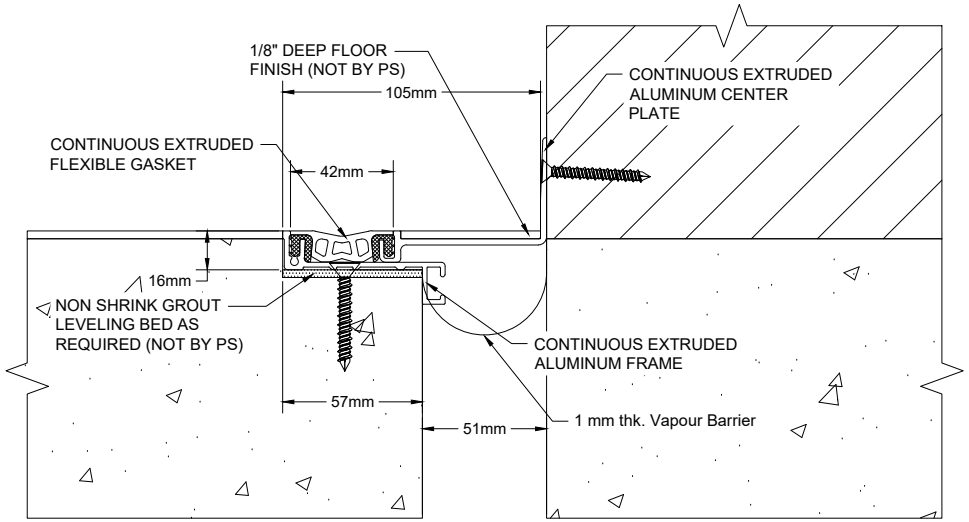

PTRW 200

GENERAL NOTES:-

1. THIS IS DRAWING IS A SOLE PROPERTY OF PINNACLE SOLUTIONS. DO NOT REPRODUCE THE DRAWING.
2. DO NOT SCALE ON THE DRAWING. USE ONLY THE SIZES/DISTANCE AVAILABLE.
3. ALL DIMENSIONS ARE IN MILLIMETRES OTHERWISE SPECIFIED.

REFERENCE DRAWING/DOCUMENT:

STATUS
ISSUED FOR APPROVAL

DATE	REV.	DRAWING NO.	Drawn By	Checked By	App'd

PINNACLE®
EXPANSION JOINTS COVER SYSTEMS

PROJECT TITLE

Drg. Title

EXPANSION JOINT DETAIL

Date: 03-08-2023 | Scale: NTS

Drawing No: | Rev. R0