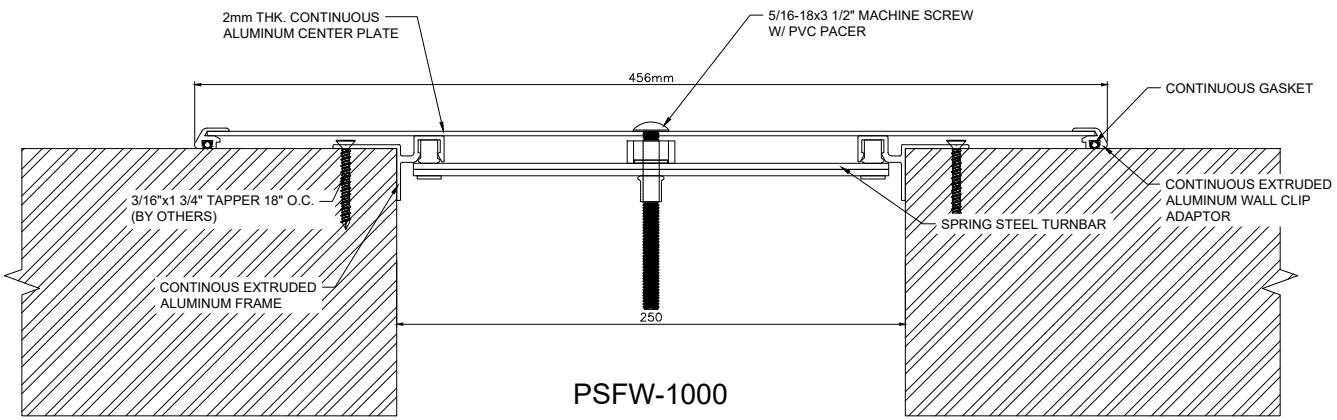


PSFW-1000

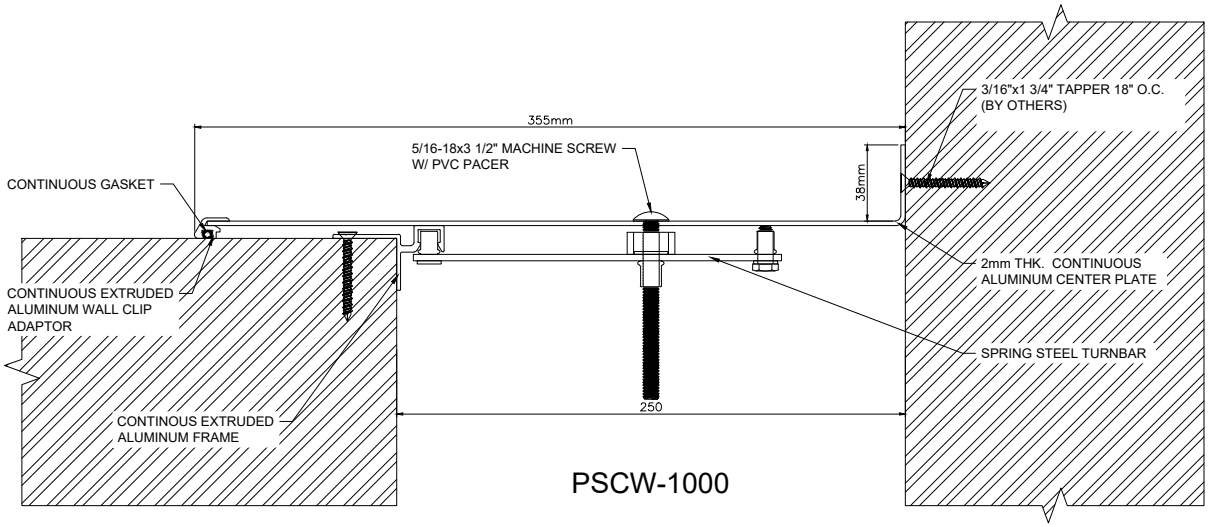


PSCW-1000

**GENERAL NOTES:-**

1. THIS IS DRAWING IS A SOLE PROPERTY OF PINNACLE SOLUTIONS. DO NOT REPRODUCE THE DRAWING.
2. DO NOT SCALE ON THE DRAWING. USE ONLY THE SIZES/DISTANCE AVAILABLE.
3. ALL DIMENSIONS ARE IN MILLIMETRES OTHERWISE SPECIFIED.

REFERENCE DRAWING/DOCUMENT:

| STATUS |
|---|
| ISSUED FOR APPROVAL |

| DATE | REV. | DRAWING NO. | Drawn By | Checked By | App'd |
|---|---|---|---|---|---|
| | | | | | |

PINNACLE
EXPANSION JOINTS COVER SYSTEMS

PROJECT TITLE

Drg. Title

EXPANSION JOINT DETAIL

Date: 03-08-2023 | Scale: NTS

Drawing No: | Rev. R0